Click on the applicable bookmark to selected the required model year

MANUAL

GENERAL INFORMATION

22100010113

Items		Vehicles with 4G63 engine	Vehicles with 4D56 engine
Transmission model		R5M21-5	R5M21-5
Type		5-speed, floor-shift	5-speed, floor-shift
Gear ratio	1st	4.330	4.330
	2nd	2.355	2.355
	3rd	1.509	1.509
	4th	1.000	1.000
	5th	0.827	0.827
	Reverse	4.142	4.142
Speedometer gear ratio (driven/drive)		29/8	26/8

Items		Vehicles with 4G64 engine	Vehicles with 4D56 engine
Transmission model		V5M21-9	V5MT1-4
Type		5-speed, floor-shift	5-speed, floor-shift
Gear ratio	1st	3.967	3.918
	2nd	2.136	2.261
	3rd	1.360	1.395
	4th	1.000	1.000
	5th	0.856	0.829
	Reverse	3.578	3.925
Transfer type		2-speed	2-speed
Gear ratio	High	1.000	1.000
	Low	1.925	1.925
Speedometer gear ratio (driven/drive)		27/8	25/8

LUBRICANTS

22100040167

Items	Specified lubricants	Quantity ℓ
Transmission oil	Hypoid gear oil SAE 75W-90, 75W-85W or 80W conforming to API GL-4	<R5M21> 2.3 <V5M21,V5MT1> 2.2
Transfer oil	Hypoid gear oil SAE 75W-90, 75W-85W or 80W conforming to API GL-4	2.3

SEALANTS

22100050054

Items	Specified sealant	Remarks
Oil filler plug <V5MT1>	3M ATD Part No. 8660 or equivalent	Semi-drying sealant
Oil drain plug <V5MT1>	3M ATD Part No. 8660 or equivalent	Semi-drying sealant
Control lever gasket	3M ATD Part No. 8661 or equivalent	Semi-drying sealant
Control lever assembly mounting bolt	3M Stud Locking No. 4170 or equivalent	Anaerobic sealant

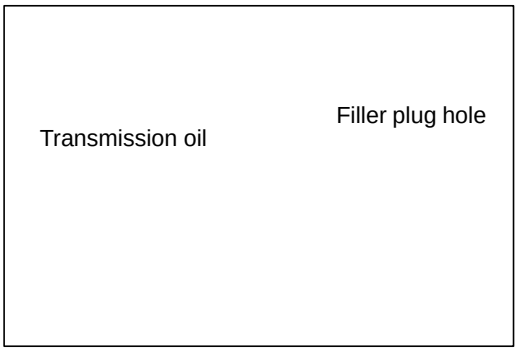

ON-VEHICLE SERVICE

22100090193

TRANSMISSION OIL CHECK

1. Remove the oil filler plug.
2. Oil level should be at the lower portion of the filler plug hole.
3. Check that the transmission oil is not noticeably dirty, and that it has a suitable viscosity.
4. Tighten the filler plug to the specified torque.

   Tightening torque:
   <R5M21, V5M21> 32 Nm
   <V5MT1> 70 Nm

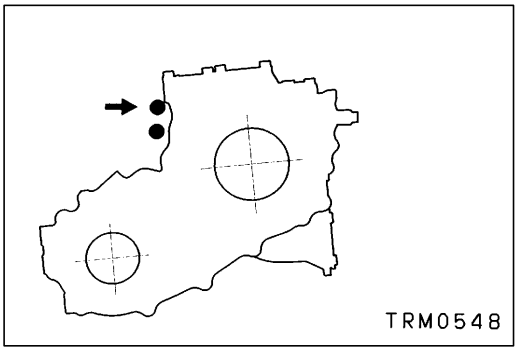

4WD DETECTION SWITCH CONTINUITY CHECK <4WD>

22100170026

Check the continuity between terminals of the black connector indicated in the illustration.

Transfer lever position	Terminal No.	
	1	2
2H		
4H	○	○

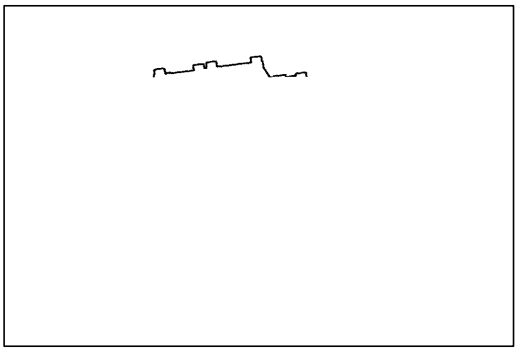

HIGH/LOW DETECTION SWITCH CONTINUITY CHECK <4WD>

22100210025

Check the continuity between terminals of the gray connector indicated in the illustration.

Transfer lever position	Terminal No.	
	1	2
4H	○	○
4L	○	○
4H-4L		

TRANSMISSION CONTROL <2WD>

22100380146

REMOVAL AND INSTALLATION

Pre-removal Operation
(1) Front Console Removal (Refer to GROUP 52A.)
(2) Shift the Control Lever to the N position

Post-installation Operation
(1) Check the Operation of the Transmission Control Lever and the Movement in Each Lever Position
(2) Front Console Installation (Refer to GROUP 52A.)

Caution: SRS
Be careful not to subject the SRS-diagnosis unit to any shocks during removal and installation of the control lever assembly.

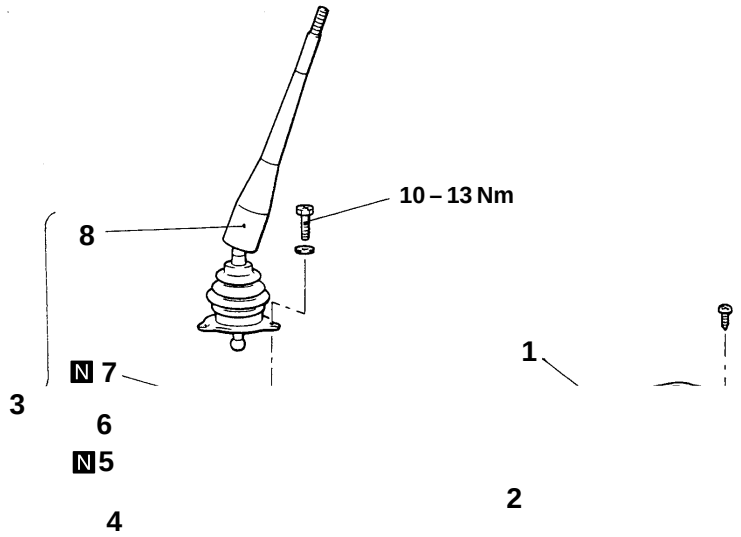

8 4	7 Apply the sealant both sides of the gasket	5 Apply the sealant to upper side of the gasket
	Sealant: **3M ATD Part No. 8661 or equivalent**	

Control lever assembly mounting bolt
Specified adhesive: **3M Stud Locking No. 4170 or equivalent**

Removal steps

1. Retainer plate
▶B◀ 2. Dust Cover
▶A◀ 3. Control lever assembly
4. Control lever bushing
5. Gasket
6. Stopper plate
7. Gasket
8. Control lever

INSTALLATION SERVICE POINTS

▶A◀ CONTROL LEVER ASSEMBLY INSTALLATION

1. Remove the adhesive sticking to the control lever assembly mounting bolts.
2. Use a tap (M8 x 1.25) to remove the adhesive sticking to the bolt holes in the control housing, and clean it by blowing in air.
3. Apply specified adhesive to the threads of the control lever assembly mounting bolts.

   Specified adhesive:
   3M Stud Locking No. 4170 or equivalent

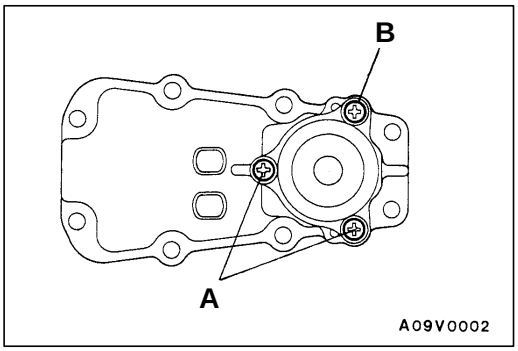

4. The dimensions of the mounting bolts vary according to their mounting locations, so do not confuse them when installing.

Bolt	Diameter x Length mm
A	8 x 23
B	8 x 22

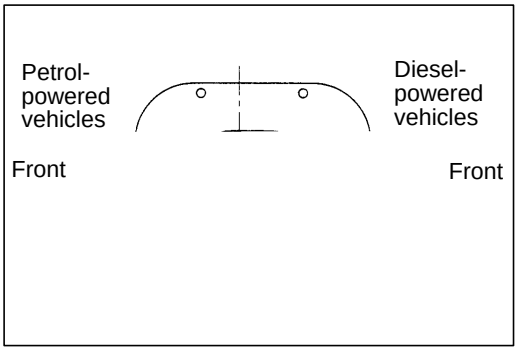

▶B◀ DUST COVER INSTALLATION

Install the dust cover so that they face as shown in the illustration.

TRANSMISSION CONTROL <4WD>

22100380153

REMOVAL AND INSTALLATION

Pre-removal Operation
(1) Front Floor Console Assembly Removal (Refer to GROUP 52A.)
(2) Shift the Transmission Control Lever to the N Position.
(3) Shift the Transfer Control Lever to the 4H Position.

Post-installation Operation
(1) Check the Operation of the Transmission and Transfer Control Levers and the Movement in Each Lever Position.
(2) Front Floor Console Assembly Installation (Refer to GROUP 52A.)

Caution: SRS
Be careful not to subject the SRS-diagnosis unit to any shocks during removal and installation of the control lever assembly.

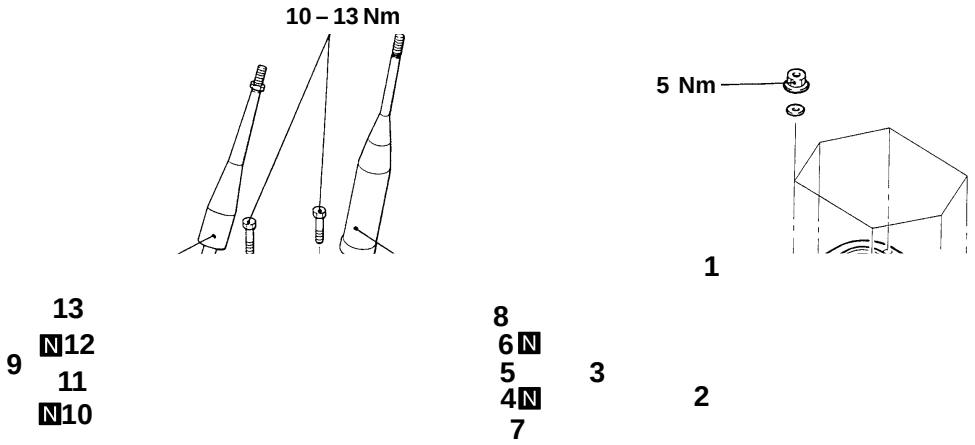

8 7	10, 12 Apply the sealant to both sides of the gasket	4, 6 Apply the sealant to both sides of the gasket
	Sealant: **3M ATD Part No. 8661 or equivalent**	

Control lever assembly mounting bolt
Specified adhesive: **3M Stud Locking No. 4170 or equivalent**

Transmission control lever assembly removal steps

1. Retainer
▶C◀ 2. Dust cover
▶B◀ 3. Transmission control lever assembly
4. Gasket
▶A◀ 5. Stopper plate
6. Gasket
7. Control lever bushing
8. Transmission control lever

Transfer control lever assembly removal steps

1. Retainer plate
▶C◀ 2. Dust cover
▶B◀ 9. Transfer control lever assembly
10. Gasket
▶A◀ 11. Stopper plate
12. Gasket
13. Transfer control lever

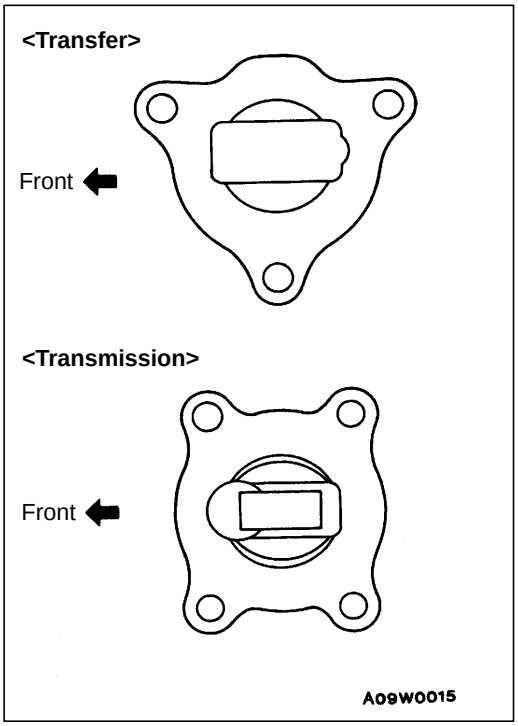

INSTALLATION SERVICE POINTS

▶A◀ STOPPER PLATE INSTALLATION

Install the stopper plates so that they face as shown in the illustration.

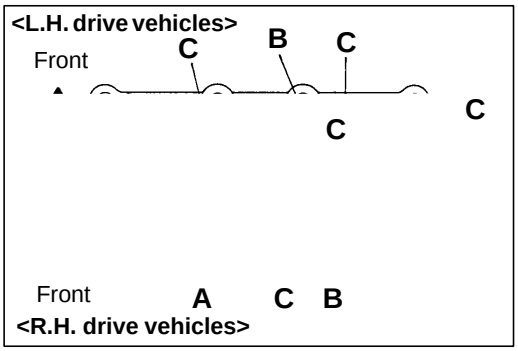

▶B◀ TRANSFER CONTROL LEVER ASSEMBLY/ TRANSMISSION CONTROL LEVER ASSEMBLY

1. Remove the adhesive sticking to the control lever assembly mounting bolts.
2. Use a tap (M8 x 1.25) to remove the adhesive sticking to the bolt holes in the control housing, and clean it by blowing in air.
3. Apply specified adhesive to the threads of the control lever assembly mounting bolts.

   Specified adhesive:
   3M Stud Locking No. 4170 or equivalent
4. The dimensions of the mounting bolts vary according to their mounting locations, so do not confuse them when installing.

Bolt	Diameter x Length mm
A	8 x 18
B	8 x 22
C	8 x 23

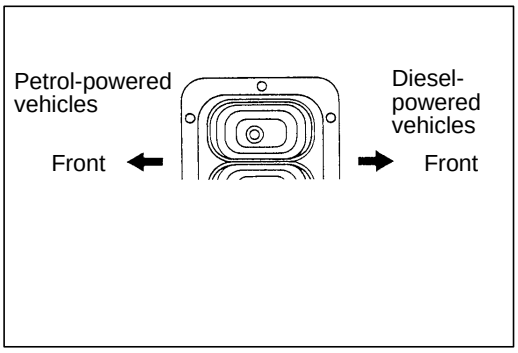

▶C◀ DUST COVER INSTALLATION

Install the dust cover so that they face as shown in the illustration.

TRANSMISSION ASSEMBLY <2WD>

22100270191

REMOVAL AND INSTALLATION

Pre-removal Operation
(1) Transmission Control Lever Removal (Refer to P. 22-6.)
(2) Transmission Oil Draining (Refer to P. 22-4.)
(3) Propeller Shaft Removal (Refer to GROUP 25.)

Post-installation Operation
(1) Propeller Shaft Installation (Refer to GROUP 25.)
(2) Transmission Oil Filling (Refer to 22-4.)
(3) Transmission Shift Lever Installation (Refer to P. 22-6.)
(4) Shift Lever Operation Check
(5) Speedometer Operation Check

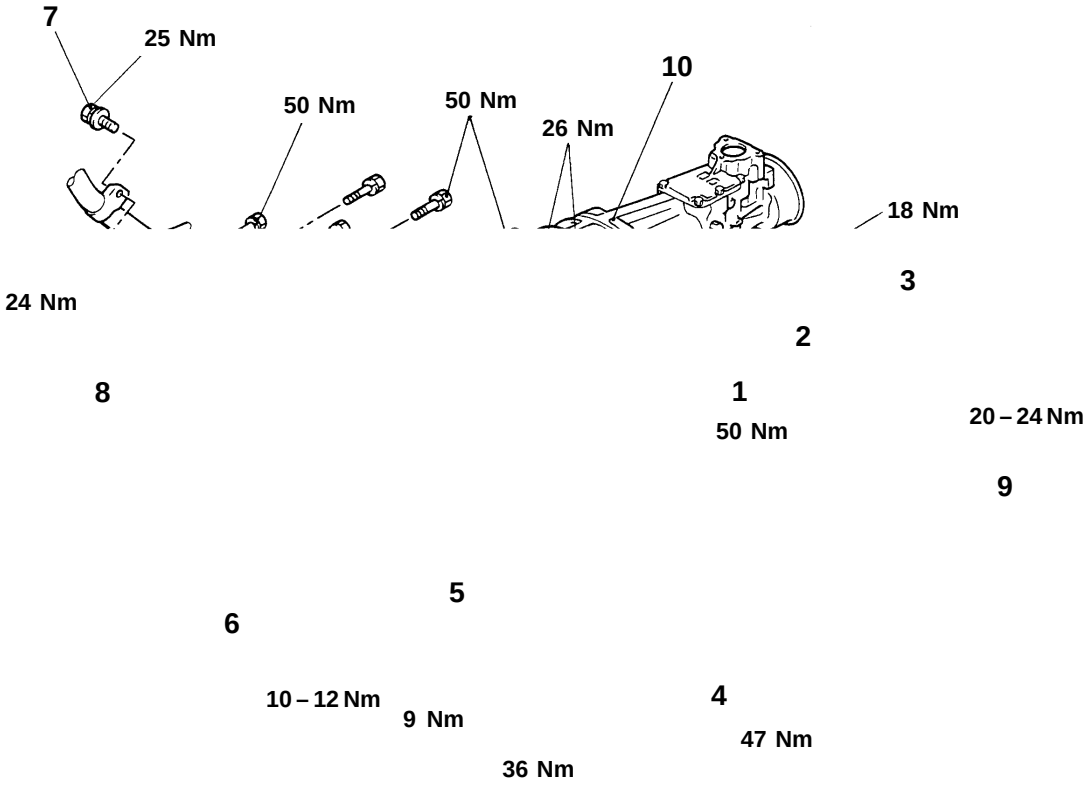

Removal steps

1. Back-up lamp switch connector
2. Earth cable connection
3. Speedometer cable connection
◀A▶ 4. Clutch release cylinder
5. Bell housing cover
◀B▶ 6. Starter motor
7. Exhaust pipe clamp mounting bolt
8. Exhaust pipe clamp mounting bracket
   - Support the transmission with a transmission jack
9. No. 2 crossmember assembly
◀C▶ ▶A◀ 10. Transmission assembly

REMOVAL SERVICE POINTS

◀A▶ CLUTCH RELEASE CYLINDER REMOVAL

Remove the clutch release cylinder without disconnecting the fluid line. Then suspend them with a cord.

◀B▶ STARTER MOTOR REMOVAL

Remove the starter motor with the starter motor harnesses still connected, and secure it inside the engine compartment.

◀C▶ TRANSMISSION ASSEMBLY REMOVAL

Caution

When removing the transmission assembly from the engine, care must be taken not to shake or rock with force, because to do so might cause damage to the end of the main drive gear, the pilot bearing, or the clutch disc, etc.

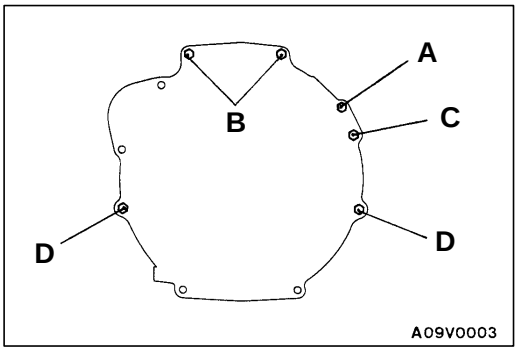

INSTALLATION SERVICE POINT

▶A◀ TRANSMISSION ASSEMBLY INSTALLATION

The sizes of the mounting bolts are different. So be sure not to confuse them.

Bolt	Diameter x Length mm
A	8 x 55
B	10 x 44
C	10 x 55
D	10 x 65

TRANSMISSION ASSEMBLY <4WD>

22100350031

REMOVAL AND INSTALLATION

Pre-removal Operation
(1) Transmission and Transfer Control Lever Removal (Refer to P. 22-8.)
(2) Transfer Case Protector Removal
(3) Transmission and Transfer Oil Draining (Refer to P. 22-4.)
(4) Front and Rear Propeller Shaft Removal (Refer to GROUP 25.)

Post-installation Operation
(1) Front and Rear Propeller Shaft Installation (Refer to GROUP 25.)
(2) Transmission and Transfer Oil Filling (Refer to P. 22-4.)
(3) Transfer Case Protector Installation
(4) Transmission and Transfer Control Lever Installation (Refer to P.22-8)
(5) Transmission and Transfer Control Lever Operation Check
(6) Speedometer Operation Check

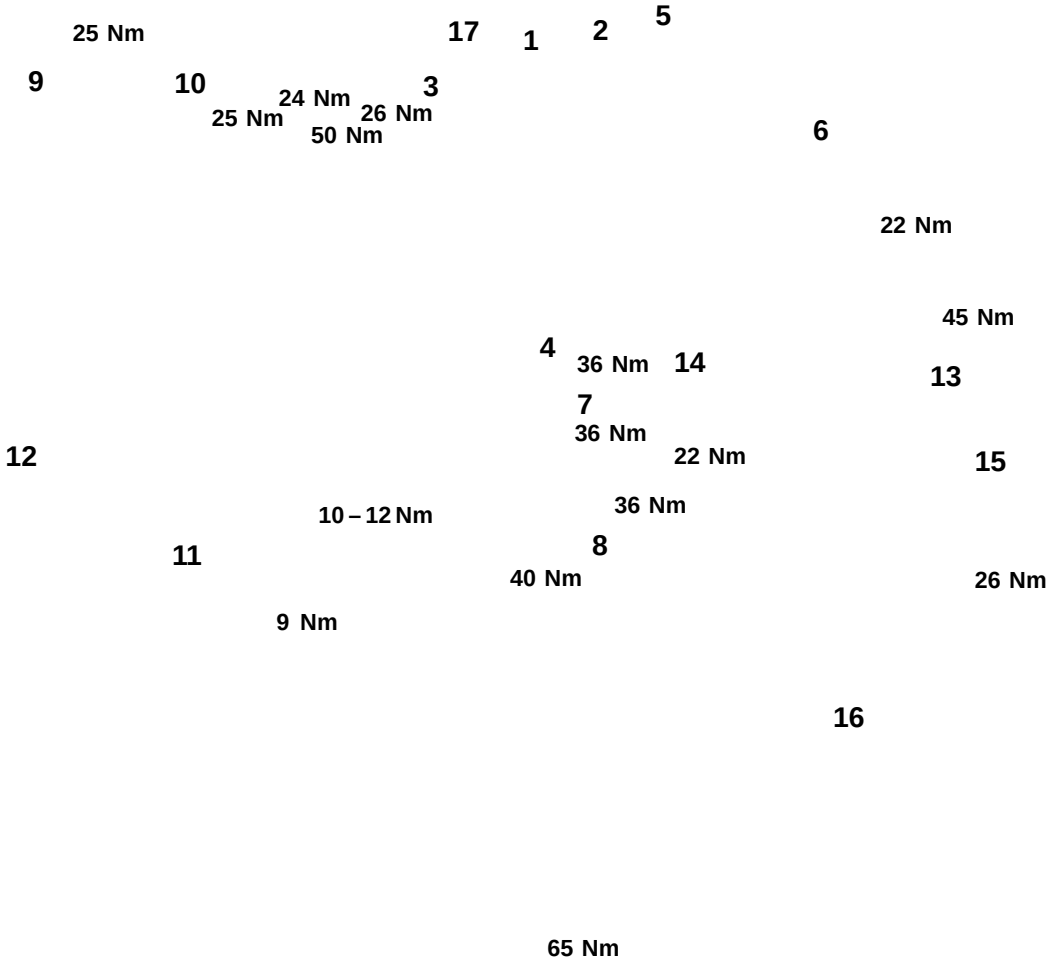

Removal steps
1. HIGH/LOW detection switch connector
2. 4WD detection switch connector
3. Back-up lamp switch connector <4D56>
4. Back-up lamp switch connector <4G64>
5. Earth cable
6. Speedometer cable connection
◀A▶ 7. Clutch release cylinder, bracket assembly <4G64>
◀A▶ 8. Clutch release cylinder <4D56>

REMOVAL SERVICE POINTS

◀A▶ CLUTCH RELEASE CYLINDER, BRACKET ASSEMBLY <4G64>/CLUTCH RELEASE CYLINDER <4D56> REMOVAL

Remove the clutch release cylinder without disconnecting fluid line. Then suspend them with a cord.

◀B▶ STARTER MOTOR REMOVAL

Remove the starter motor with the starter motor harnesses still connected, and secure it inside the engine compartment.

◀C▶ TRANSMISSION ASSEMBLY REMOVAL

Caution
When removing the transmission assembly from the engine, care must be taken not to shake or rock with force, because to do so might cause damage to the end of the main drive gear, the pilot bearing, or the clutch disc, etc.

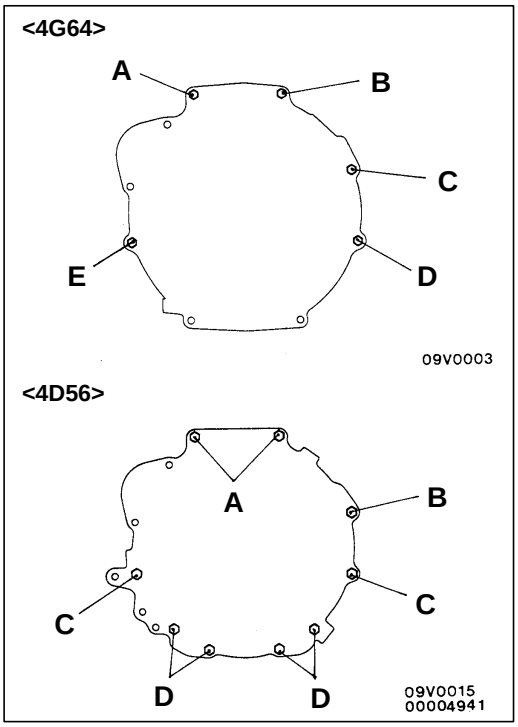

INSTALLATION SERVICE POINT

▶A◀ TRANSMISSION ASSEMBLY INSTALLATION

The sizes of the mounting bolts are different. So be sure not to confuse them.

<4G64>

Bolt	Diameter x Length mm
A	10 x 35
B	10 x 40
C	10 x 60
D	10 x 65
E	10 x 75

<4D56>

Bolt	Diameter x Length mm
A	10 x 45
B	8 x 30
C	10 x 80
D	10 x 25

4WD INDICATOR-ECU

22100620019

REMOVAL AND INSTALLATION

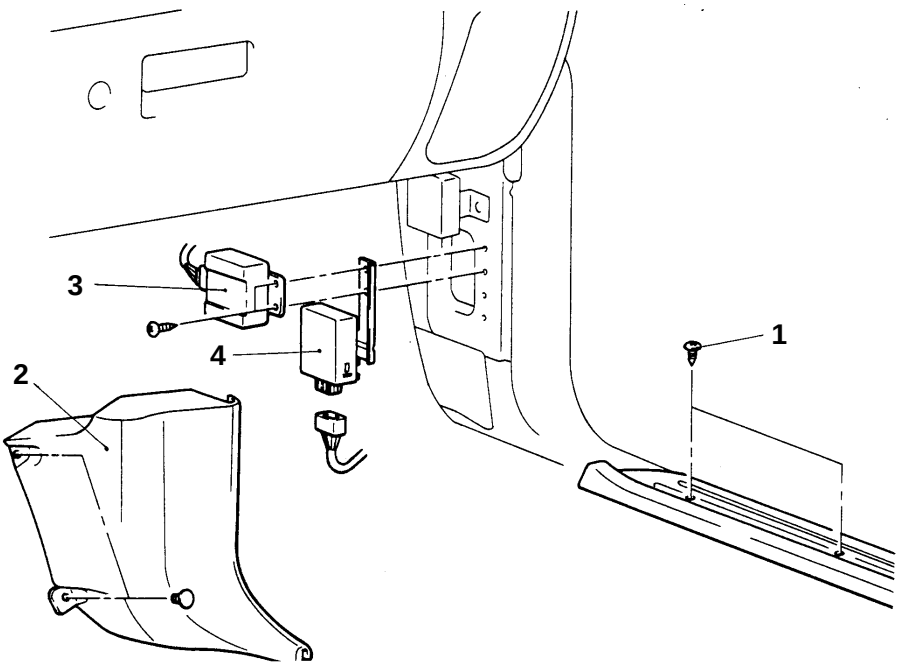

Removal steps

1. Front scuff plate attaching screw
2. Cowl side trim
3. Rear differential lock-ECU
4. 4WD indicator-ECU

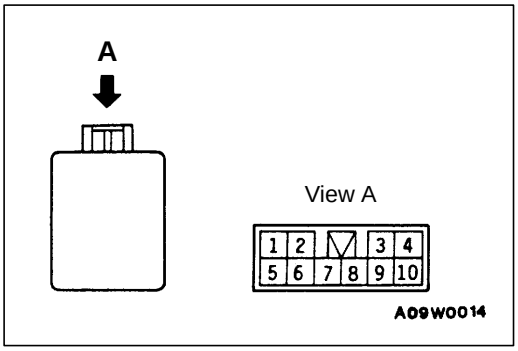

INSPECTION

4WD INDICATOR-ECU

1. Measure the voltage with the control unit and harness still connected.
2. Earth terminal (8) and then measure terminal voltage.

Terminal No.	Inspection item	Inspection condition 1: Ignition switch	Inspection condition 2: Transfer lever position	Terminal voltage
1	Free wheel engage switch	ON	2H	System voltage
			4H*1	0 V
2	4WD detection switch	ON	2H	System voltage
			4H, 4L	0 V
3	Ignition switch (IG1)	OFF	±	0 V
		ON	±	System voltage
5	Free wheel differen-tial indicator lamp	ON	2H	System voltage
			4H*1	0 V
6	HI/LOW detection switch	ON	Shifting from 4H to 4L or vice versa	System voltage
			2H, 4H, 4L	0 V
7	Free wheel clutch changeover solenoid valve	ON	4H, 4L	0 V
			2H*2	System voltage
10	4WD Indicator lamp	ON	2H	0 V
			4H, 4L	System voltage

NOTE
*1: When vehicle has been moved once.
*2: Shift the lever from 4H to 2H, and then turn the ignition switch to OFF and then back to ON.

GROUP 22
MANUAL TRANSMISSION

GENERAL

OUTLINE OF CHANGE

Due to the addition of the vehicles with emission regulation step III compatible 4D5 engine, R5M21 type transmission has been changed.

GENERAL INFORMATION

Items		Specifications
Engine model		4D56-Step III
Transmission model		R5M21-5
Type		5-speed, floor-shift
Gear ratio	1st	3.967
	2nd	2.136
	3rd	1.360
	4th	1.000
	5th	0.856
	Reverse	3.578
Speedometer gear ratio (driven/drive)		26/8

NOTES